FELIX Security Systems

FE-2NO (Fail Secure)
FE-2NC (Fail Safe)

ELECTRIC STRIKE LOCK

Product Features

- Special design, easy to adjust the distance of the lock-tongue.
- Holding force 1200lbs.
- Testing to 100000 cycles.
- Suitable for: Narrow wooden door, narrow Metal door.
- Easy installation, long lifespan.

Technical Specifications

Model	FE-2NO / FE-2NC
Strike Structure	Stainless steel
Feature	Fail Secure(FE-2NO) / Fail Safe(FE-2NC)
Holding Force	1200lbs
Current	200mA
Voltage	DC12V
Function	Built-out MOV
Surface Temperature	Within +20°C
Suitable Temperature	-10°C ~+55°C
Operating Humidity	0-95% (non-condensing)
Face plate Housing	Painted Steel
Dimensions	250L*25W*31H (mm)
Weight	400g
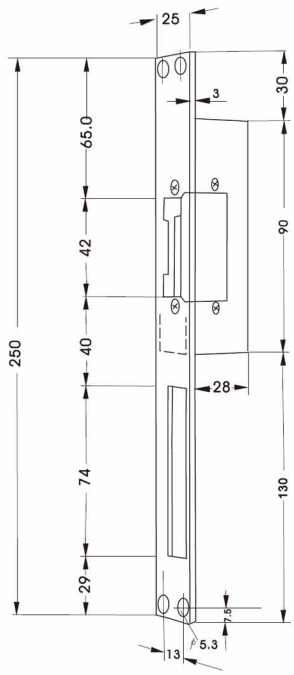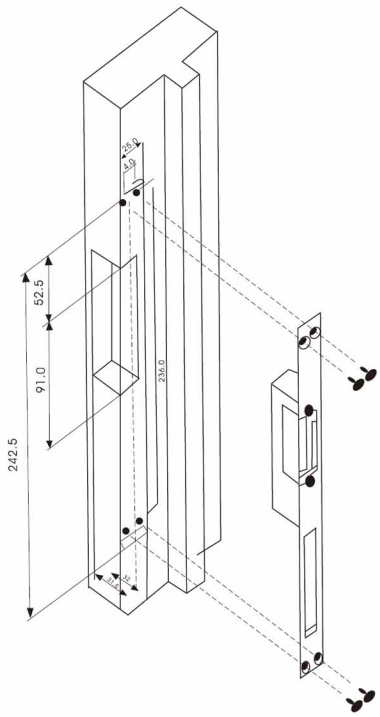
Dimension